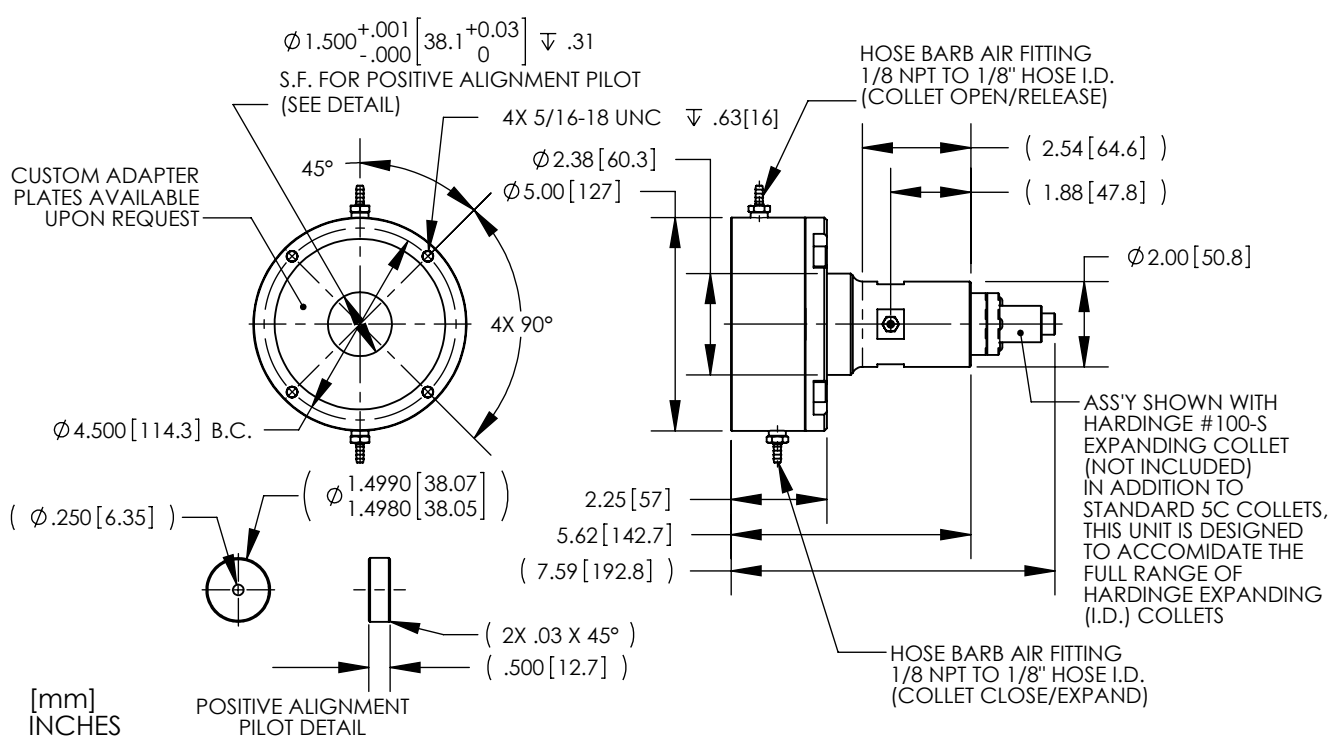
∅1.500 +.001 -.000 [38.1 +0.03 0] ↧ .31
S.F. FOR POSITIVE ALIGNMENT PILOT
(SEE DETAIL)
4X 5/16-18 UNC ↧ .63[16]
HOSE BARB AIR FITTING
1/8 NPT TO 1/8" HOSE I.D.
(COLLET OPEN/RELEASE)
45°
∅2.38[60.3]
∅5.00[127]
(2.54[64.6])
(1.88[47.8])
CUSTOM ADAPTER
PLATES AVAILABLE
UPON REQUEST
∅2.00[50.8]
4X 90°
∅4.500[114.3] B.C.
ASS'Y SHOWN WITH
HARDINGE #100-S
EXPANDING COLLET
(NOT INCLUDED)
IN ADDITION TO
STANDARD 5C COLLETS,
THIS UNIT IS DESIGNED
TO ACCOMIDATE THE
FULL RANGE OF
HARDINGE EXPANDING
(I.D.) COLLETS
(∅1.4990 1.4980 [38.07 38.05])
(∅.250[6.35])
2.25[57]
5.62[142.7]
(7.59[192.8])
(2X .03 X 45°)
(.500[12.7])
HOSE BARB AIR FITTING
1/8 NPT TO 1/8" HOSE I.D.
(COLLET CLOSE/EXPAND)
[mm]
INCHES
POSITIVE ALIGNMENT
PILOT DETAIL